Fig. 34 (Rev. 10/07) (Concluded)
(New 9/77)

PANEL PRODUCTS, PACKAGED, UNIFORM LENGTH 8 FT OR OVER, UNIFORM WIDTH PACKAGES, LENGTHWISE—BULKHEAD FLATCARS

Item	No. of Pcs.	Description
C	1 per each Item B.	Package ties: 5/8 in. × .020 in. high tension steel bands. Locate 12 in. to 24 in. from each end of package with intermediate bands equally spaced in between. Apply around package and Item B. This banding may be substituted with approved non-metallic strapping as permitted in General Rule 19 of Section 1.
D	Minimum of 2 per pile between side-by-side packages.	Vertical load stabilizers: lumber, 2 in. × 4 in. Length must extend to car floor but not exceed load height. Secure with 16-D nail to outer Items B of each pile. Not required for loads made of packages whose width precludes loading side by side.
E	2 per package 14 ft long or less. 3 per package over 14 ft to 20 ft long. 4 per package over 20 ft to 32 ft long.	Securement bands: 1 1/4 in. × .029 in. high tension bands secured to lading strap anchors, stake pockets, or constant tensioning devices if car is so equipped. May be substituted with 4 in. polyester web straps on cars so equipped; all straps are to be used.
F	1 per package u p to 8 ft long. 2 per package over 8 ft to 20 ft long. 3 per package over 20 ft to 32 ft long.	Unitizing bands: 1 1/4 in. × .029 in. high tension bands secured to anchor plates or car deck under items B.
G	As required.	Side blocking: lumber, each two pieces of 2 in. × 4 in. minimum, laminated, preferably rough. Locate each side of load at pile separations to contact adjacent piles equally and at ends of load. Secure lower piece to car floor with four 16-D nails and top piece to one below in like manner.
H	As required, after compression.	Vertical blocking: lumber, 2 in. × 4 in. minimum, preferably rough, height to extend 2 in. below load height. Locate in void between ends of piles nearest to midpoint between bulkheads. Place outside blocking 12 in. from sides of load, place inside blocking 12 in. from center of car. Secure on top with one single 2 in. × 4 in., minimum piece of lumber placed flat and nailed with one 16-D nail to the top of each vertical block. Horizontal member must not extend beyond sides of load.
Alternate Item E		
E	2 per package 14 ft long or less. 3 per package over 14 ft to 20 ft long. 4 per package over 20 ft to 32 ft long.	Web tie-down assemblies: polyester webbing 4 in. wide with a minimum breaking strength of 20,000 lb. See General Rule 20 of Section No 1.

Notes and Additional Requirements:

1. Load must be uniform height throughout. Height of load not to exceed height of bulkheads.
2. Deck of flatcars must be free of debris, snow, and ice before loading.
3. Compress load to remove slack by means of inflatable dunnage. Preferred procedure is to tighten or depress the load lengthwise by use of 48 in. × 108 in. inflatable dunnage bags prior to placement of Item G. After load is compressed, inflatable dunnage bags must be removed and Items G applied.
4. Laminated bearing pieces and vertical stabilizers are not permitted unless AAR approved and stamped.
5. Addition of one crosswise package may be utilized to take up void. Pile to be secured with a minimum of two 1 1/4 in. bands or polyester straps.

Reference the General Rules in Section 1 of the *Open Top Loading Rules Manual* for additional details.

Fig. 35 (Rev. 11/15)
(New 10/81)

PANEL PRODUCTS, UNCOATED, 6 FT LONG AND OVER—BULKHEAD FLATCARS

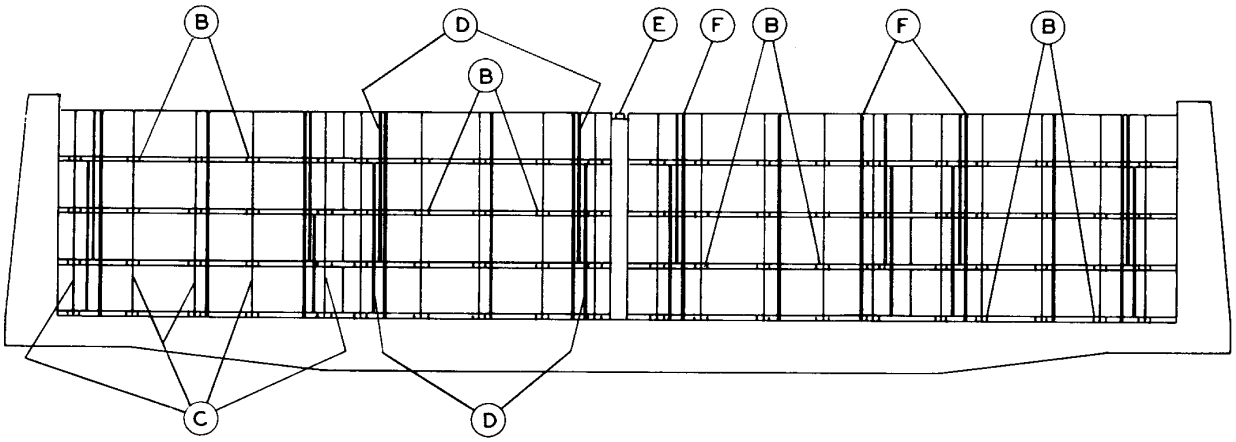

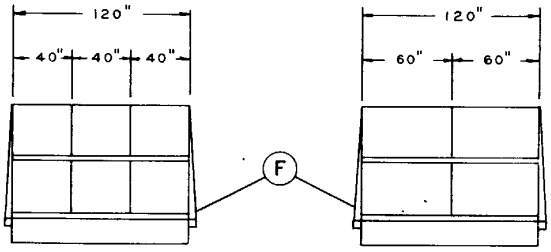

Item	No. of Pcs.	Description
A		Vacant.
B	3 per package 8 ft long. 4 per package over 8 ft to 10 ft or less. 5 per package over 10 ft to 14 ft or less. Over 14 ft add one for each additional 2 ft or less.	Bearing pieces and separators: Lumber or laminated particleboard. The height of bearing pieces may be equal to but no greater than their width and must have a minimum width of 3 in., length equal to width of package. Secure to bottom of each package with one Item C. Laminated particleboard must be fastened together with a minimum of three nails or staples, length equal to thickness of laminated particleboard. May be attached to Item C with package bands.
C	1 per each Item B.	Package bands: 5/8 in. × .020 in. high tension bands. Locate 12 in. to 24 in. from each end of package with intermediate bands equally spaced between. Apply around package and Item B. This banding may be substituted with approved non-metallic strapping as permitted in General Rule 19 of Section 1.
D	2 per each outside top package. 2 per each outside bottom package.	Unitizing bands: 1 1/4 in. × .029 in. high tension bands. Two tiers: Bind the side-by-side packages in the top tier to the side-by-side packages in the bottom tier by encircling them with two bands spaced approximately 24 in. from ends of packages. Three or more tiers: Bind the side-by-side package in the top tier to the side-by-side packages in the intermediate tier(s) by wrapping them with two bands spaced approximately 24 in. from ends of packages. Then bind the side-by-side packages in the bottom tier to the side-by-side packages in the intermediate tier(s) by wrapping them with two bands spaced approximately 16 in. from the ends of packages.

IMPLEMENTED 11/2015

Fig. 35 (Rev. 11/15) (Concluded)
(New 10/81)

PANEL PRODUCTS, UNCOATED, 6 FT LONG AND OVER—BULKHEAD FLATCARS

Item	No. of Pcs.	Description
E	As required.	Vertical filler: to be positioned to fill void at centermost part of load. Void 12 in. or under may be filled with upright sheets of particleboard and two inflatable dunnage bags (see Note 3). When total void exceeds 12 in., centermost void may be reduced by sheets of particleboard secured to bulkhead by 1 1 /4 in. × .029 in. bands and/or by one pile loaded crosswise. Crosswise pile, when used, to be completely encircled by two 1 1/4 in. × .029 in. high tension bands.
F	2 per pile 8 ft long or less. Add one for each additional 4 ft or less. 2 per pile 4 ft wide or less, if loaded crosswise	Securement bands: 1 1/4 in. × .029 in. high tension bands. Secure to lading strap anchors, stake pockets or constant tensioning devices if car is so equipped. Crosswise packages less than 4 ft wide must be unitized together by two 1 1/4 in. × .029 in. high tension bands. Crosswise packages must be of uniform length and width.
Alternate Item D		
Alt D	2 per each outside top package.	Encircling bands: 1 1/4 in. × .029 in. high tension bands. Encircle all side-by-side packages in a pile and locate approximately 24 in. from ends of packages. May be substituted for Item D unitizing bands only when load is three tiers high or less. Not shown on drawing.
Alternate Item F		
Alt F	2 per pile 8 ft long or less. Add one for each additional 4 ft or less. 1 per pile 4 ft wide or less, if loaded crosswise	Web tie-down assemblies: polyester webbing 4 in. wide with a minimum breaking strength of 20,000 lb. See General Rule 20 of Section 1.

Notes and Additional Requirements:

1. Height of load not to exceed height of bulkheads.
2. Deck of flatcars must be free of debris, snow, and ice before loading.
3. Disposable pneumatic dunnage adequately secured to prevent displacement may be used when 12 in. or less of lengthwise void remains in the car. Minimum of two bags to be placed upright or crosswise between buffer material. Minimum of two 1/4 in. hardboard sheets extending to height and width of load to be placed each side of bag. Bags to extend 1 in. from floor of car to top of load. Bags to be inflated initially to 8 psi. Bags must be minimum six-ply. Bags may not be used in tandem (inflated face to inflated face). Bag placement will be between piles nearest the midpoint between bulkheads. Protective cover, if used, must be adequately secured to prevent dislodgement.
4. Packages may not exceed width of car deck.
5. MDF is an acronym for medium density fiberboard, a wood-composite-based sheet product, and is a recognized industry term. Where lumber securement items in this figure refer to particleboard, MDF product may be substituted. MDF product, if loaded or used with this figure, must be uncoated.

Reference the General Rules in Section 1 of the *Open Top Loading Rules Manual* for additional details.

IMPLEMENTED 11/2015

Fig. 37 (Rev. 08/14)
(New 03/01)

PANEL PRODUCTS, PACKAGED 6 FT LONG OR OVER, 40 IN. HIGH OR LESS—CENTER A-FRAME FLATCARS, WITH CABLE TIE-DOWNS

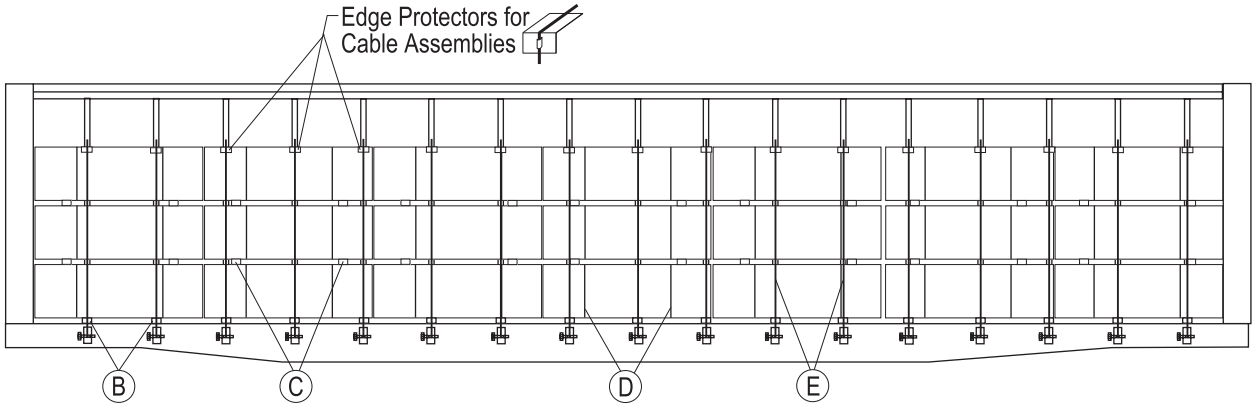

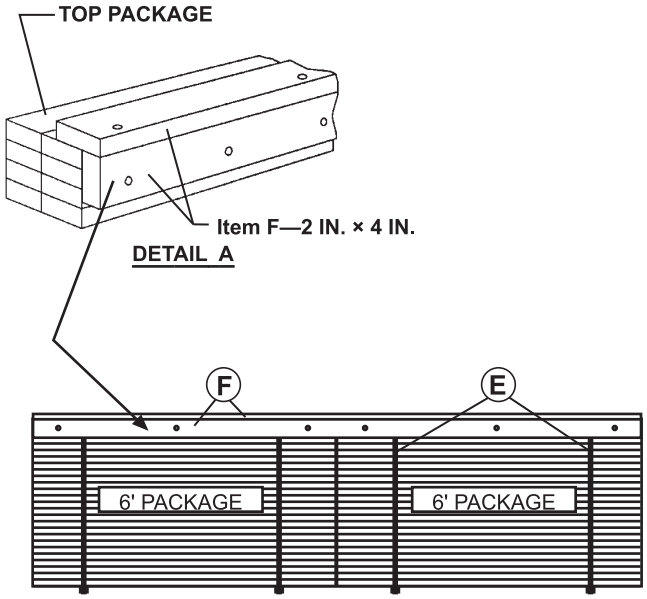

TOP LAYER UNIT
SKETCH 1

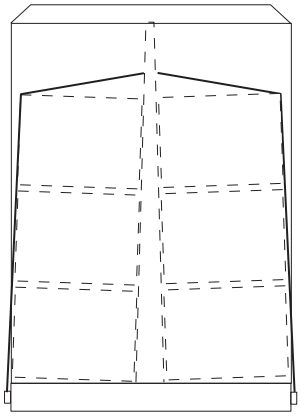

END VIEW

Item	No. of Pcs.	Description
A		Vacant
B	Minimum 2 per package.	Bearing pieces: cars are equipped with permanent floor bearing pieces wedged at 90° to A-frame. Refer to Alternate Item B for cars not equipped with permanent floor bearing pieces.
C	Minimum 2 per package.	Separators: lumber, 2 in. × 3 in. minimum, of one piece, and preferably rough. Height must not exceed width. Length must be equal to width of package. All separators must be in one piece. Locate approximately 18 in. from each end of package. Separators may be secured to top or bottom of packages with Item D package ties. When attached to top of packages in the top layer of load, each separator must be secured to the package with one 10-D nail. (Use of separators is optional.)
D	Minimum 2 per package.	Package bands: minimum 5/8 in. × .035 in. polyester strapping. If load contains no void space, 5/8 in. × .020 in. high tension bands may be used. Locate one tie about one-fourth the length from each end of package.